SUNTREE TECHNOLOGIES MODEL NO. NSBB 10—14—96

RECOMMENDED PIPE SIZES 42" to 72"

FLOW, TREATMENT, & BYPASS SPECIFICATIONS FOR THE BIOMASS SEPARATING BASKET

1.Inflow Pipe Area	12.5 SQ.FT.
2.Open Orifice Area in Biomass Separating Basket	57.4 SQ.FT.
3.Treatable Flow Area With No Blockage	57.4 SQ.FT.
4.Treatable Flow Area With 50% Blockage	28.7 SQ.FT.
5.Treatable Flow Area With 75% Blockage	14.3 SQ.FT.

BASKET STORAGE = 123.7 CU. FT. (4.5 CU YD.)

SEDIMENT STORAGE

Lower Front Chamber	135 CU. FT.
Lower Middle Chamber	132 CU. FT.
Lower Rear Chamber	132 CU. FT.
TOTAL	399 CU. FT. (14.8 CU YD.)

Suntree Technologies Inc.
798 Clearlake Road, Cocoa, Florida 32922
PH: 321-637-7552 Fax: 321-637-7554

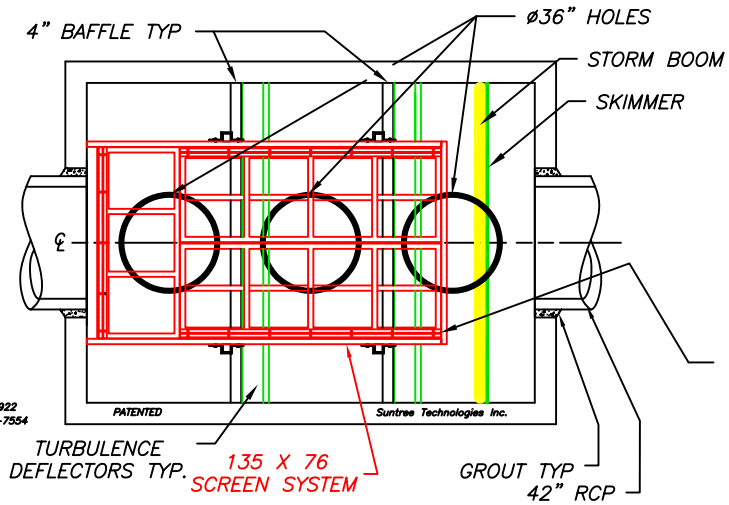

PLAN VIEW

PATENTED
AND PATENTS PEND.

THE STRUCTURE IN THIS DRAWING IS PRIMARILY INTENDED TO BE INSTALLED IN OFF ROAD LOCATIONS WITH LESS THAN 5' OF COVER. STRUCTURES ARE READILY AVAILABLE FOR ALL OTHER CONDITIONS. CONSULT SUNTREE TECHNOLOGIES' REPRESENTATIVE FOR DETAILS.

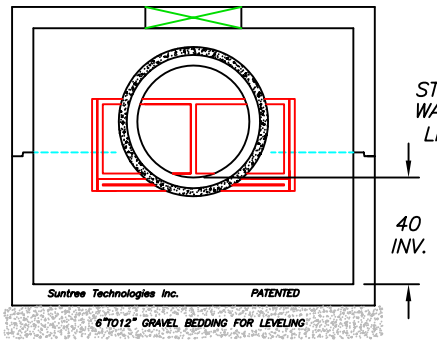

LEFT END VIEW

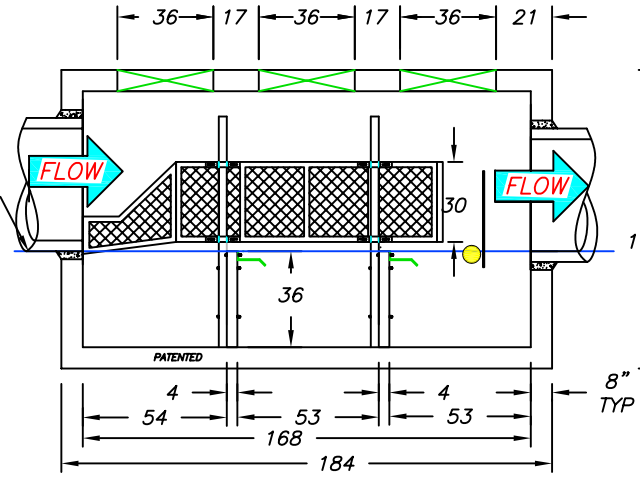

FRONT VIEW

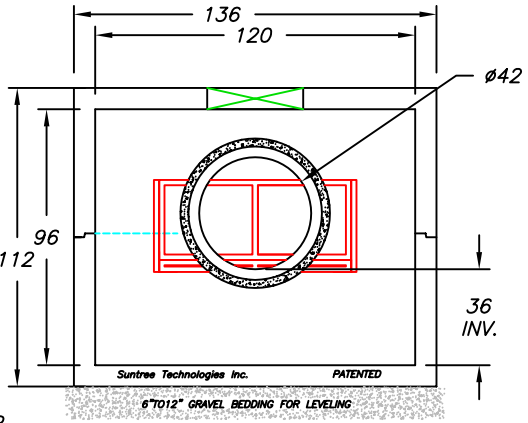

RIGHT END VIEW

NOTES:

1. CONCRETE 28 DAY COMPRESSIVE STRENGTH fc=5,000 PSI.
2. REINFORCING:ASTM A-615, GRADE 60.
3. SUPPORTS AN H20 LOADING AS INDICATED BY AASHTO.
4. JOINT SEALANT: BUTYL RUBBER SS-S-00210
5. ALL WALLS, TOP + BOTTOM ARE 8" THICK.

PEAK DESIGN FLOW

70 C.F.S.

TREATMENT DESIGN FLOW

40 C.F.S.

SUNTREE TECHNOLOGIES, INC. 798 CLEARLAKE RD. SUITE #2 COCOA, FL. 32922		PROJECT: SUNTREE TECHNOLOGIES SPEC.
NUTRIENT SEPARATING BAFFLE BOX MODEL NO.NSBB 10-14-96		REVISIONS: / DATE:
		REVISIONS: / DATE:
DATE: 03/25/05	SCALE: SF = 72	REVISIONS: / DATE:
DRAFTER: N.R.B.	UNITS =INCHES	REVISIONS: / DATE: